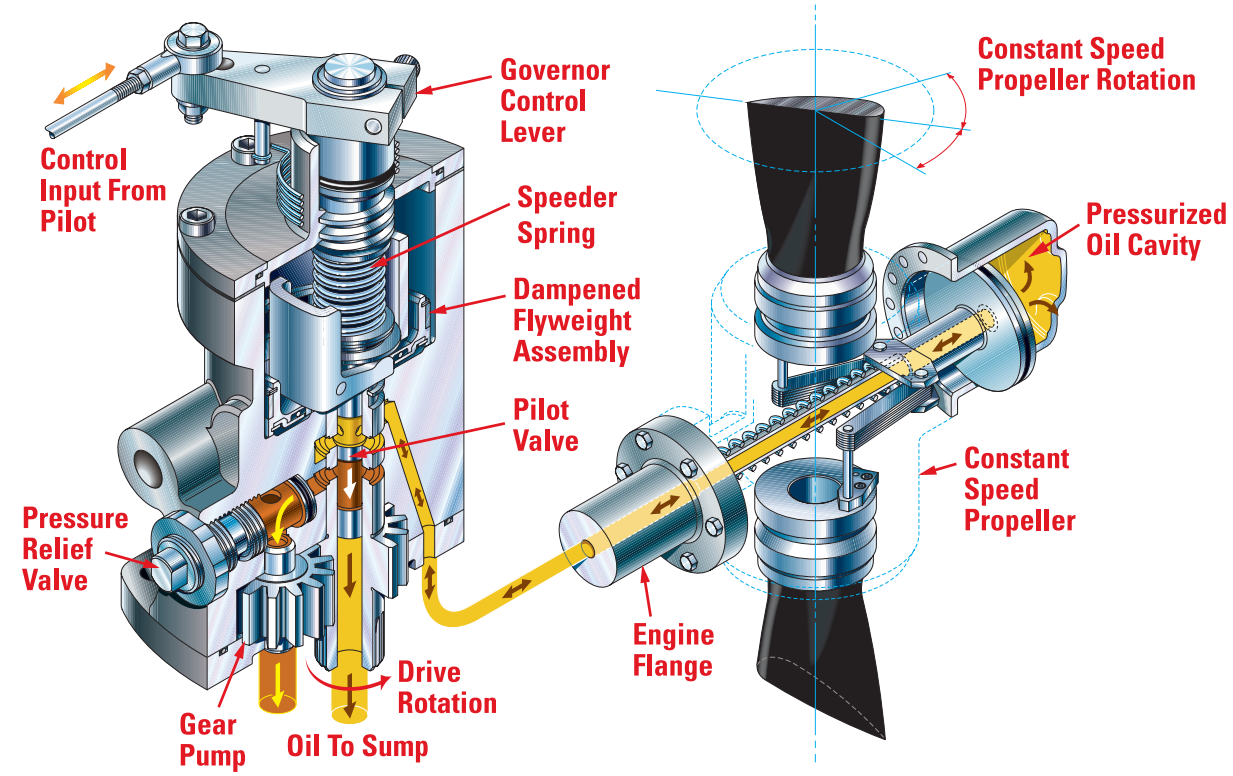
Governor Control Lever
Control Input From Pilot
Speeder Spring
Dampened Flyweight Assembly
Pilot Valve
Pressure Relief Valve
Gear Pump
Oil To Sump
Drive Rotation
Engine Flange
Constant Speed Propeller Rotation
Pressurized Oil Cavity
Constant Speed Propeller

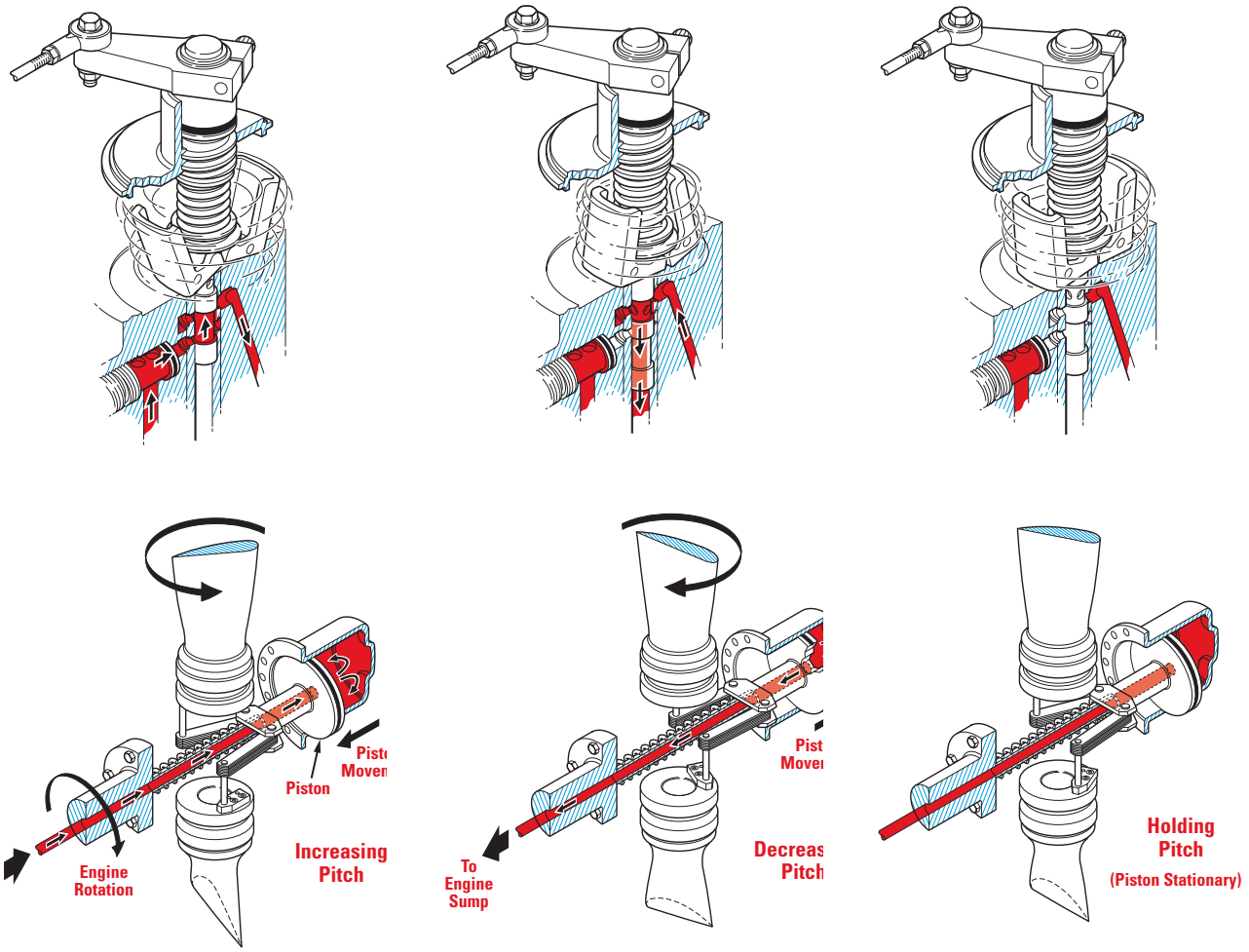
Piston
Engine Rotation
Increasing Pitch
To Engine Sump
Holding Pitch
(Piston Stationary)